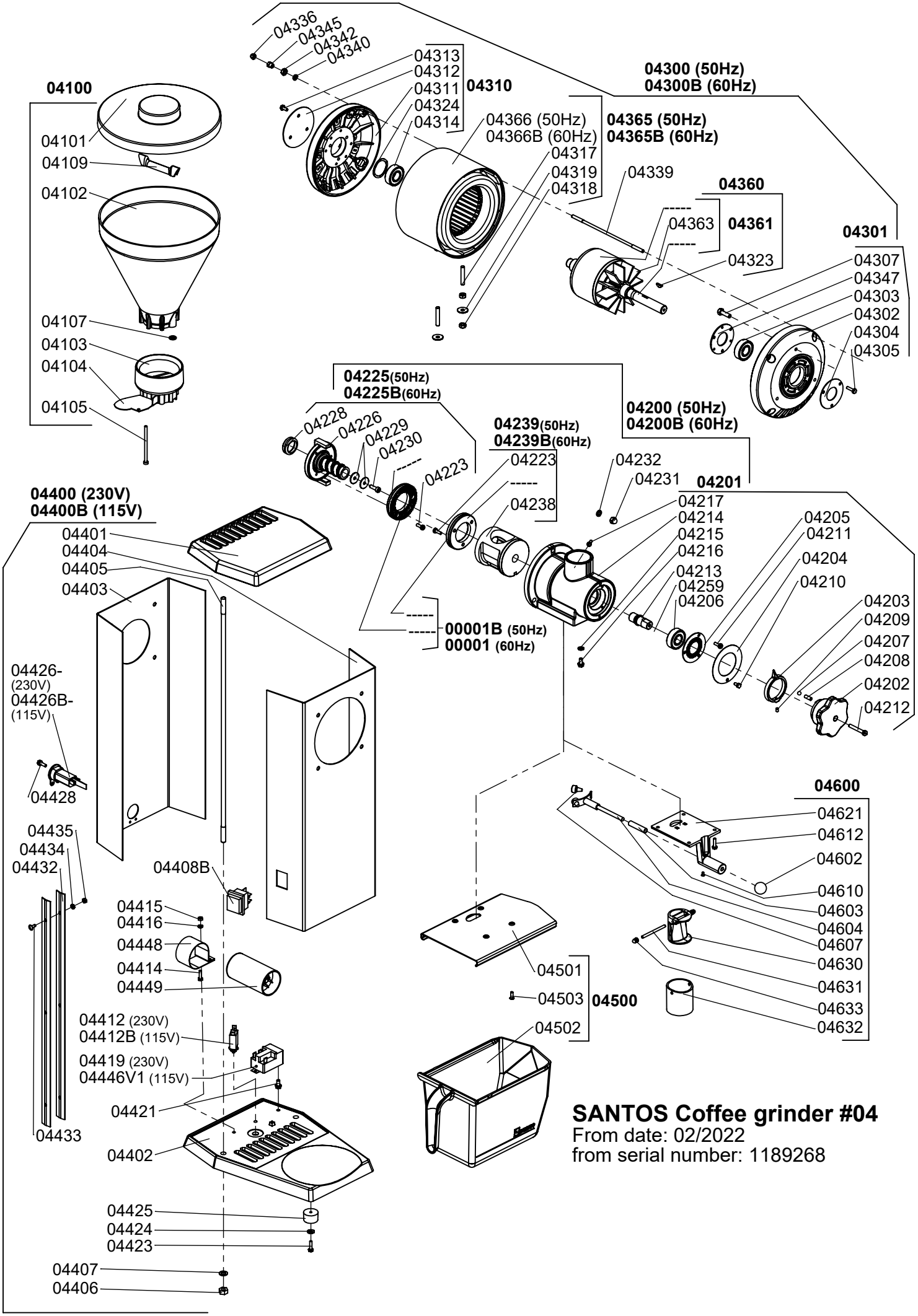

SANTOS Coffee grinder #04
From date: 02/2022
from serial number: 1189268