SANTOS Coffee grinder #42
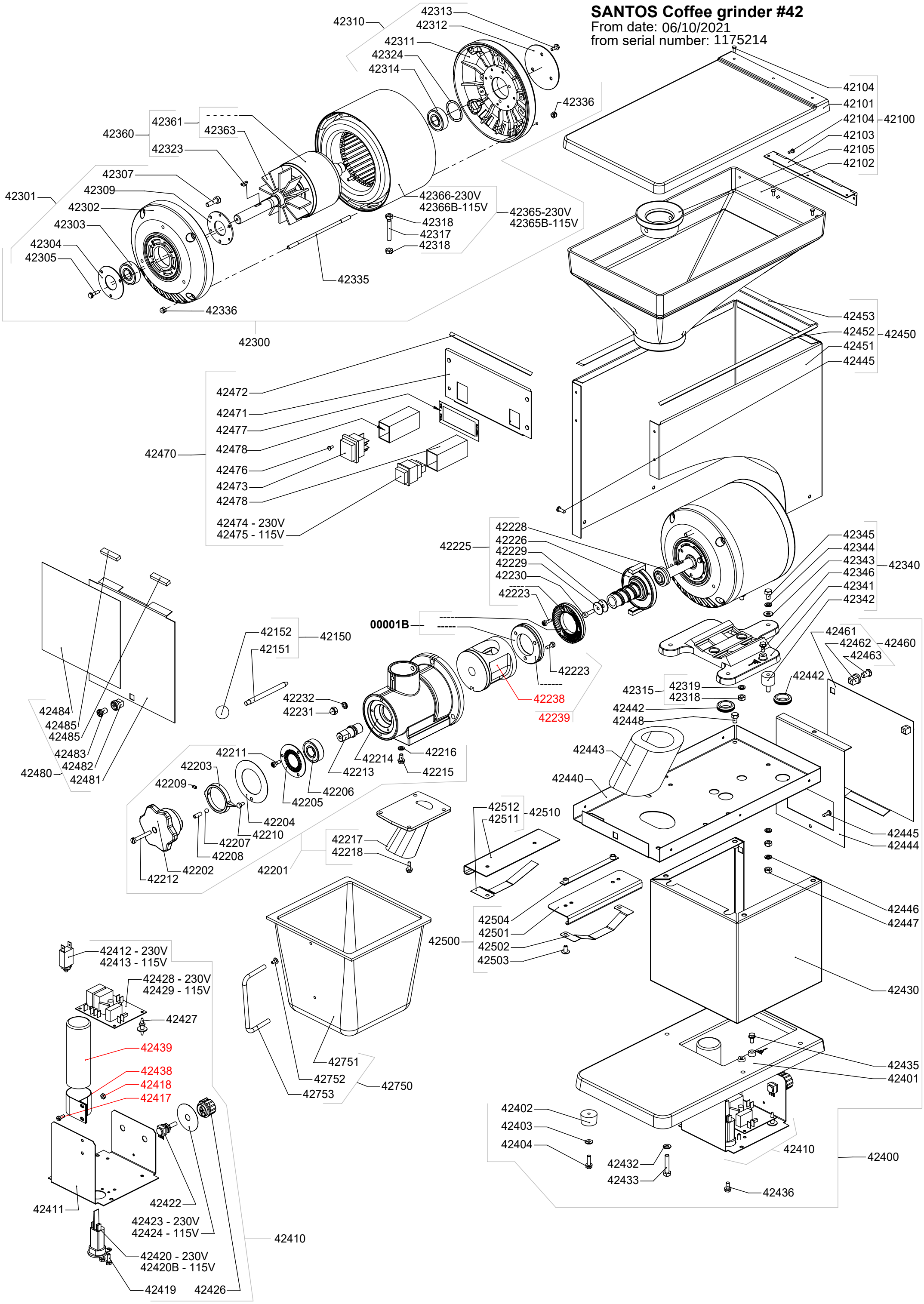
From date: 06/10/2021
from serial number: 1175214